Alfa Romeo
1969 Spider Veloce
USA Version

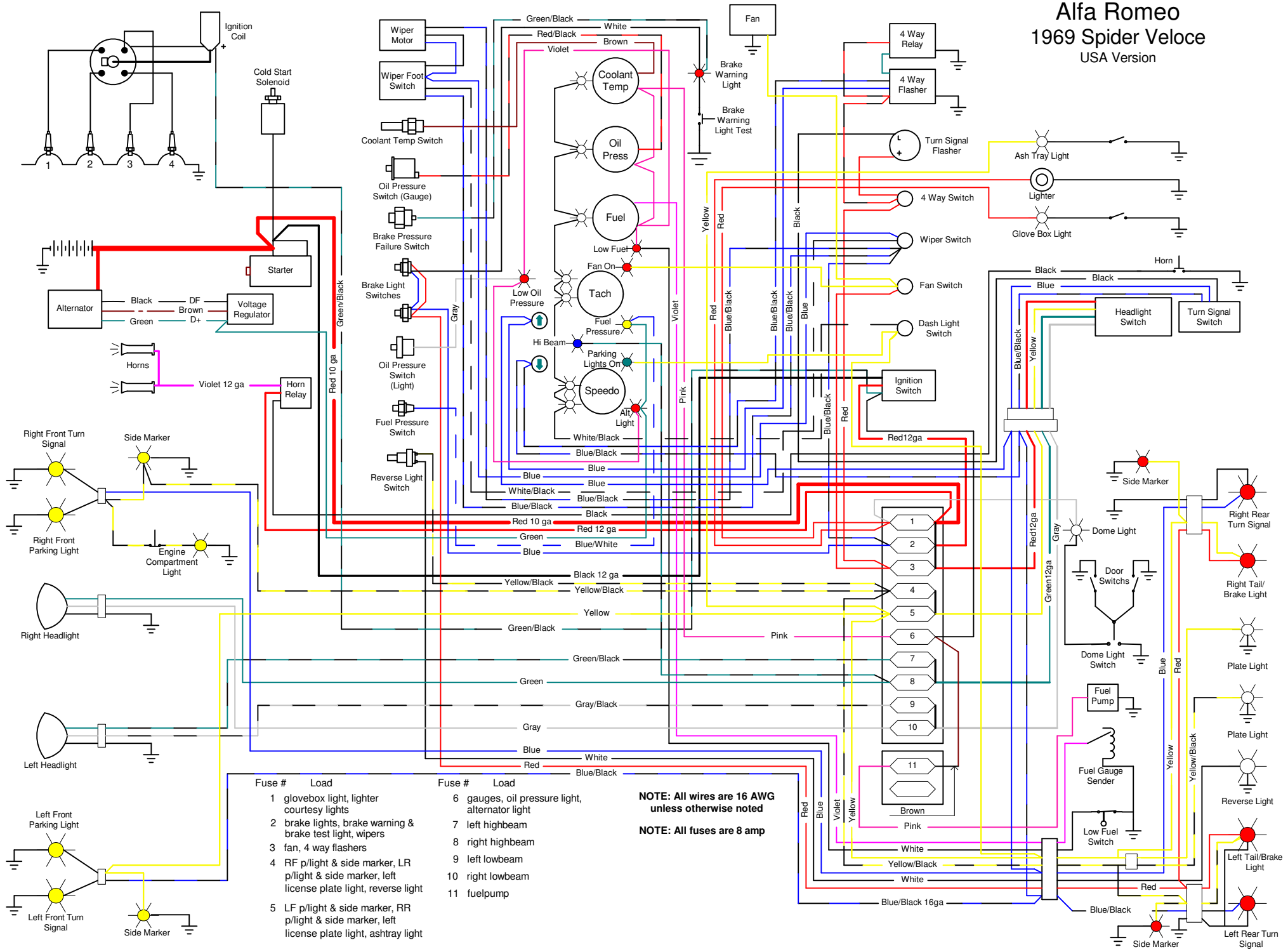

Fuse #	Load
1	glovebox light, lighter courtesy lights
2	brake lights, brake warning & brake test light, wipers
3	fan, 4 way flashers
4	RF p/light & side marker, LR p/light & side marker, left license plate light, reverse light
5	LF p/light & side marker, RR p/light & side marker, left license plate light, ashtray light
6	gauges, oil pressure light, alternator light
7	left highbeam
8	right highbeam
9	left lowbeam
10	right lowbeam
11	fuelpump

NOTE: All wires are 16 AWG unless otherwise noted

NOTE: All fuses are 8 amp